saip.it

SI Type

Bladder accumulators in carbon steel
For pressures up to 360 bar

SAIP
energy flow

Bladder accumulators in carbon steel For pressures up to 360 bar **SI** Type

Principle Of Operation

One of the main tasks of accumulators is to take a certain amount of pressurised fluid from a hydraulic system, and then return it, in whole or in part, to the system when required. Bladder accumulators work like a hydraulic spring: the gas (nitrogen), contained in the rubber bladder, is separated from the fluid in the system. When the hydraulic system pressure becomes greater than the pre-charge pressure of the nitrogen, the fluid enters the accumulator and is stored as potential energy inside, due to the compressibility of the gas. When the system fluid pressure decreases, the nitrogen pressure expands and returns the stored fluid to the system. Operating pressures adapted to the maximum allowable pressure allow a pressurised fluid to be accumulated, stored and recovered at any time.
As pressure vessels, they must be sized for the maximum operating (over) pressure, taking into account the acceptance standards valid in the country of installation.
Bladder-type SI accumulators consist of a seamless cylindrical body made of high-strength steel.
The rubber bladder is mounted inside the body. Through the gas valve, the bladder is filled with nitrogen up to the expected precharge pressure P0 (special equipment must be used for precharge). The 'mushroom' valve, located at the bottom on the fluid side, closes if the gas pressure is higher than the fluid pressure. This prevents the bladder from entering the fluid line and being destroyed. When the minimum working pressure is reached, it is necessary that a small volume of fluid (approx. 10% of the nominal volume of the accumulator) remains between the bladder and the mushroom valve, to prevent the bladder from hitting the valve during each expansion process.
The standard poppet valve is available in the threaded (or SAE shank) connections shown in the table.
The top plate contains the technical data and characteristics of the hydraulic accumulator.
Bladder accumulators can be installed vertically, in a tilted position (with the oil valve at the bottom), or horizontally. If the installation position is horizontal or inclined, the effective fluid volume and the maximum permissible flow rate of the operating fluid are reduced.

Product Description

Repairable bladder-type accumulator with seamless steel body for use in mobile machines and static systems.

Applications

- Energy reserve in systems with intermittent operation due to reduced pump power.
- Energy reserve for emergency cases, such as in the event of pump-motor unit failure or power failure.
- Compensation of losses due to leakage.
- Pressure compensator (balancing).
- Vibration dampening in the event of periodic oscillations.
- Volume compensation in the event of pressure and temperature variations.
- Hydraulic suspension spring on vehicles.
- Shock absorption in the event of mechanical impact.
- Pulsation damping

Suggested positions for certain applications

Energy storage: with the gas valve on the top

Pulsation damping: Vertical, with gas valve on top, or horizontal

Constant pressure maintenance: Vertical, with gas valve on top, or horizontal

Volume compensation: with the gas valve on the top

Features

A Seamless body
B Bladder
C Bladder valve 7/8" UNF
D Gas valve 5/8" UNF
E Mushroom valve
F Nameplate

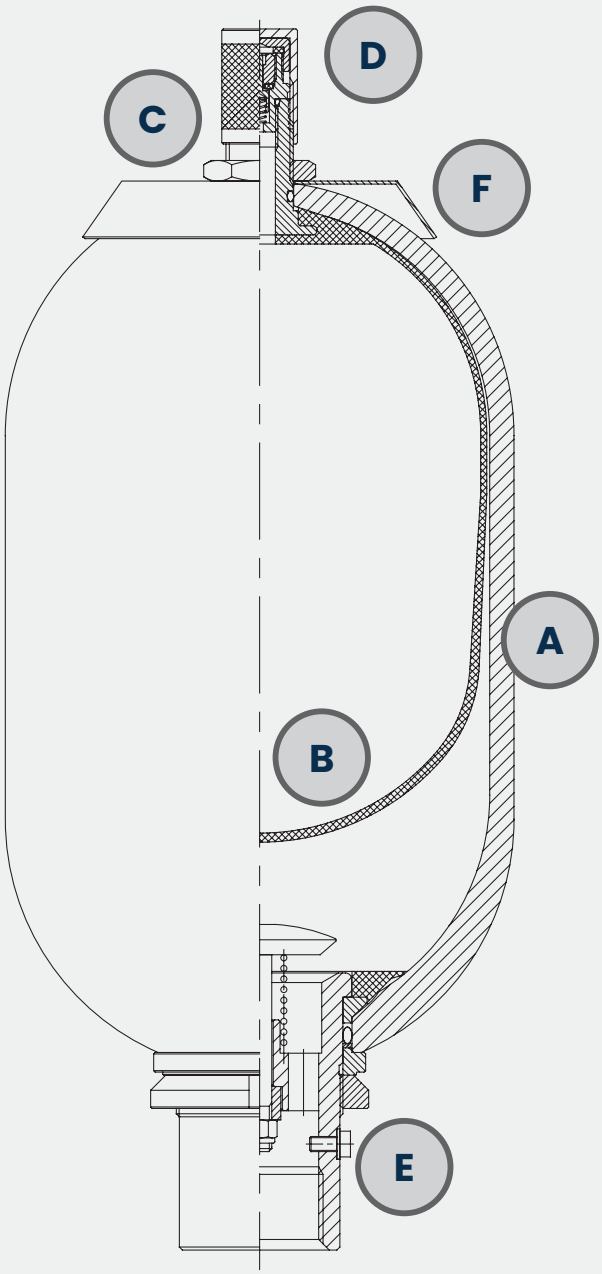

General characteristics

Nominal Volume
from 4 to 50 litres

Up to
MAX pressure 360 barg

In accordance with:
PED 2014/68/EU
EN 14359
EN13445-3
ASME VIII Div. 1

Technical features

Repairable construction

Seamless high-strength steel body

Standard painting

RAL 9005

Sandblasting + two-component anticorrosive primer with epoxy resins >= 75 µm
alternatively
Thermoplastic polyamide powder coating

Gas side connection 5/8" UNF.

Fluid side connection
(see table)

Separator element material
(see table)

SI Type bladder accumulators in carbon steel for pressures up to 360 bar

Description

Accumulator /Pulsation damper type SI - Valv. 5/8" UNF - Stem 7/8" UNF - Vol. 10 L - FKM - CARB. STEEL. - 2" SAE 3000 Flange Shank

CODE EXAMPLE *															
SI	•	1U	•	10	•	10	•	O	•	F	•	B	•	CSO3G	
1		2		3		4		5		6		7		8	

1. ACCUMULATOR TYPE
SI

2. GAS CONNECTON (NITROGEN)	
1U	Stem 7/8" UNF gas valve 5/8" UNFF

4. SEPARATOR ELEMENT MATERIAL	
1	Nitrile (NBR)
1C	Low temp. Nitrile. (NBR -40°C)
1F	Nitrile for hydrocarbons(NBR)
6	Hydrogenated Nitrile (H-NBR)
8	Epichlorohydrin (ECO)
2	Butyl
4	Ethylene/propylene (EPDM)
5	Chloroprene (Neoprene)
10	Fluororated Rubber (FKM)

5. BODY MATERIAL	
O	Carbon steel
X	Stainless steel
OR	Carbon steel coated with thermoplastic polyamide powder

7. CERTIFICATION	
A	PED 2014/68/EU EN 14359:2017 EN13445-3:2021
E	PED 2014/68/EU ASME VIII Div.1
B	ASME VIII Div.1 U-STAMP

3. NOMINAL VOLUME	
1	L
2,5	L
4	L
6	L
10L	L
10	L
12	L
20	L
25	L
35	L
42	L
50	L

6. FLUID CONNECTION	
C5	F. 3/4" BSP-P
C5	F. 3/4" BSP-P
C7	F. 1.1/4" BSP-P
F	SAE Flange shank
C7	F. 1.1/4" BSP-P
F	SAE Flange shank
C7	F. 1.1/4" BSP-P
F	SAE Flange shank
C9	F. 2" BSP-P
F	SAE Flange shank
C9	F. 2" BSP-P
F	SAE Flange shank
C9	F. 2" BSP-P
F	SAE Flange shank
C9	F. 2" BSP-P
F	SAE Flange shank
C9	F. 2" BSP-P
F	SAE Flange shank
C9	F. 2" BSP-P
F	SAE Flange shank
C9	F. 2" BSP-P
F	SAE Flange shank

8. FLANGE SHANK	
–	–
–	–
–	–
CSO3E	1.1/4" SAE 3000
CSO6E	1.1/4" SAE 6000
–	–
CSO3E	1.1/4" SAE 3000
CSO6E	1.1/4" SAE 6000
–	–
CSO3E	1.1/4" SAE 3000
CSO6E	1.1/4" SAE 6000
–	–
CSO3F	1.1/2" SAE 3000
CSO6F	1.1/2" SAE 6000
CSO3G	2" SAE 3000
CSO6G	2" SAE 6000
–	–
CSO3F	1.1/2" SAE 3000
CSO6F	1.1/2" SAE 6000
CSO3G	2" SAE 3000
CSO6G	2" SAE 6000
–	–
CSO3F	1.1/2" SAE 3000
CSO6F	1.1/2" SAE 6000
CSO3G	2" SAE 3000
CSO6G	2" SAE 6000
–	–
CSO3F	1.1/2" SAE 3000
CSO6F	1.1/2" SAE 6000
CSO3G	2" SAE 3000
CSO6G	2" SAE 6000
–	–
CSO3F	1.1/2" SAE 3000
CSO6F	1.1/2" SAE 6000
CSO3G	2" SAE 3000
CSO6G	2" SAE 6000
–	–
CSO3F	1.1/2" SAE 3000
CSO6F	1.1/2" SAE 6000
CSO3G	2" SAE 3000
CSO6G	2" SAE 6000
–	–
CSO3F	1.1/2" SAE 3000
CSO6F	1.1/2" SAE 6000
CSO3G	2" SAE 3000
CSO6G	2" SAE 6000

* For different codes or features please contact SAIP

BLADDER COMPATIBILITY / TEMPERATURE / FLUID *			
1	Rubber Perbunan (NBR)	-15 / +80°C	**Suitable for:** • Mineral fats and oils • Aliphatic hydrocarbons (propane, butane, petrol, oils, mineral fats, diesel fuel, fuel oil, kerosene) • HFA - HFB - HFC fluids • Many diluted acids • Saline solutions • Water • Glycol water
1C	Low temp. Nitrile (NBR -40°C)	-40 / +70°C	**Suitable for:** • Fluids such as for standard NBR (see above) • Various types of freon
1F	Nitrile for Hydrocarbons (NBR)	-10 / +90°C	**Suitable for:** • Fluids such as for standard NBR (see above) • Heavy fuel oil • Normal and super (low aromatic) petrol
6	Hydrogenated Nitrile (H-NBR)	-30 / +130°C	**Suitable for:** • Fluids such as for standard NBR (see above) with excellent low and high temperature performance; higher chemical resistance
8	Rubber in Epichlorohydrin (ECO)	-30 / +120°C	Low gas permeability, good resistance to ozone, ageing and weathering. **Suitable for:** • Mineral fats and oils • Aliphatic hydrocarbons (propane, butane, petrol) • Silicone oils and greases • Water at room temperature
2	Butyl	-20 / +100°C	**Suitable for:** • Hot water up to 100° C • glycol-based brake fluids • silicone oils and greases • many acids and bases of phosphoric acid esters • salt solutions, polar solvents such as alcohols, ketones and esters • polyglycol-based hydraulic fluids
4	Ethylene/propylene (EPDM)	-30 / +130°C	**Suitable for:** • Hot water up to 100° C • glycol-based brake fluids • silicone oils and greases • many acids and bases of phosphoric acid esters • many polar solvents such as alcohols, ketones and esters
5	Chloroprene (Neoprene)	-30 / +100°C	**Suitable for:** • mineral paraffin oils, silicone oils and greases • naphthenic mineral oils, low molecular aliphatic hydrocarbons (propane, butane, petrol) • glycol-based brake fluids • water and aqueous solutions, refrigerants (ammonia, carbon dioxide, Freon) ketones and esters
10	Fluororated Rubber (FKM)	10 / +150°C	**Suitable for:** • Mineral oils and fats, silicone oils and fats, animal and vegetable oils and fats • aliphatic hydrocarbons (petrol, butane, propane, natural gas), aromatic hydrocarbons (benzole, toluol) • chlorinated hydrocarbons (tetrachloroethylene, carbon tetrachloride) • fuels (normal, super and methanol-containing) • non-flammable fluids of the HFD group

* For the use with different fluids and/or temperatures please contact SAIP

SI Type bladder accumulators in carbon steel for pressures up to 360 bar

THREADED Fluid Connection

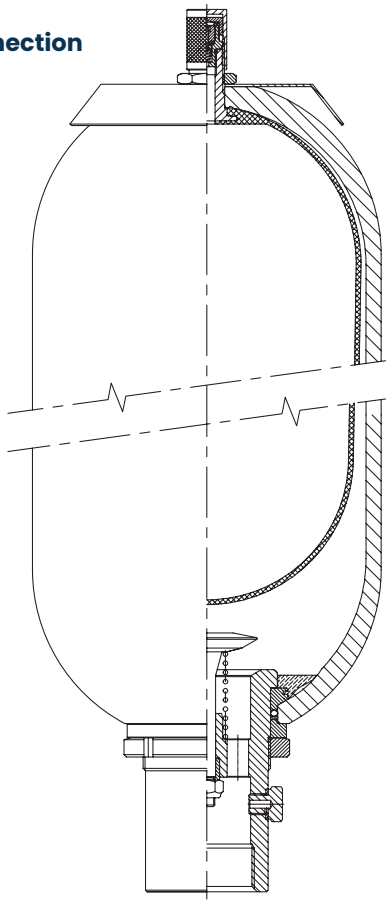

SAE 3000 and SAE 6000 Fluid Connection

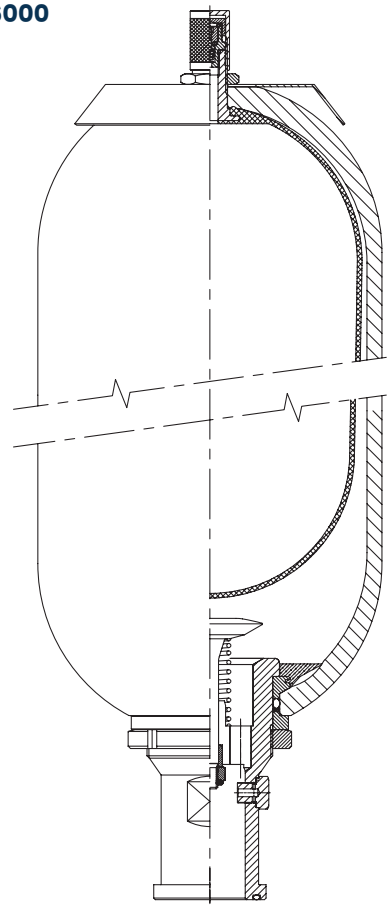

Technical Data Threaded Fluid Connection

Type	Effective volume	Nominal volume	Design pressure EN (1)	Design pressure ASME (2)	ΔP MAX(3) dynamic P2 - P1	MAX compression ratio P2 : P0	Flowrate MAX(4)	Precharge MAX(5) design EN	PED category (for group 2 fluids)	Weight
	[L]	[L]	[barg]	[barg]	[barg]		[L/min]	[barg]		[Kg]
SI 1	1	1	**360**	**250**	200	4:1	240	250	Art.4 Par. 3	9
SI 2,5	2,5	2,5	**360**	**250**	200	4:1	240	250	Cat: II	15
SI 4	3,7	4	**360**	**250**	200	4:1	450	250	Cat: III	14
SI 6	5,7	6	**360**	**250**	200	4:1	450	250	Cat: III	19
SI 10L	9,5	10	**360**	**250**	200	4:1	450	250	Cat: IV	31
SI 10	9,5	10	**360**	**250**	100	4:1	900	250	Cat: IV	33
SI 12	11	12	**360**	**250**	100	4:1	900	250	Cat: IV	37
SI 20	18	20	**360**	**250**	100	4:1	900	250	Cat: IV	48
SI 25	23,5	25	**360**	**250**	100	4:1	900	250	Cat: IV	53
SI 35	33,5	35	**360**	**250**	100	4:1	900	250	Cat: IV	78
SI 42	40	42	**360**	**250**	100	4:1	900	250	Cat: IV	90
SI 50	48,5	50	**360**	**250**	100	4:1	900	250	Cat: IV	110

(1) Design pressure calculated according to EN14359:2017 (for pressure values according to other norms please contact SAIP)

(2) Design pressure calculated according to ASME VIII Div.1 – Appendix 22 (for pressure values according to other norms please contact SAIP)

(3) Maximum admissible differential pressure (pressure difference between the maximum operating pressure P2 and the minimum operating pressure P1) to have an infinite life cycle (more than 2.000.000 cycles)

(4) Flowrate measured using mineral oil with viscosity of 36 cSt at 50 °C and ΔP = 5 bar

(5) For higher values please contact SAIP

Technical Data SAE 3000 Fluid Connection

Type	Effective volume	Nominal volume	Design pressure EN (1)	Design pressure ASME (2)	ΔP MAX(3) dynamic P2 - P1	MAX compression ratio P2 : P0	Flowrate MAX(4)	Precharge MAX(5) design EN	PED category (for group 2 fluids)	Weight
	[L]	[L]	[barg]	[barg]	[barg]		[L/min]	[barg]		[Kg]
SI 4	3,7	4	**280**	**207**	200	4:1	450	140	Cat: II	14
SI 6	5,7	6	**280**	**207**	200	4:1	450	140	Cat: III	19
SI 10L	9,5	10	**280**	**207**	200	4:1	450	140	Cat: III	31
SI 10	9,5	10	**210**	**207**	100	4:1	900	140	Cat: III	33
SI 12	11	12	**210**	**207**	100	4:1	900	140	Cat: III	37
SI 20	18	20	**210**	**207**	100	4:1	900	140	Cat: IV	48
SI 25	23,5	25	**210**	**207**	100	4:1	900	140	Cat: IV	53
SI 35	33,5	35	**210**	**207**	100	4:1	900	140	Cat: IV	78
SI 42	40	42	**210**	**207**	100	4:1	900	140	Cat: IV	90
SI 50	48,5	50	**210**	**207**	100	4:1	900	140	Cat: IV	110

Technical Data SAE 6000 Fluid Connection

Type	Effective volume	Nominal volume	Design pressure EN (1)	Design pressure ASME (2)	ΔP MAX(3) dynamic P2 - P1	MAX compression ratio P2 : P0	Flowrate MAX(4)	Precharge MAX(5) design EN	PED category (for group 2 fluids)	Weight
	[L]	[L]	[barg]	[barg]	[barg]		[L/min]	[barg]		[Kg]
SI 4	3,7	4	**360**	**250**	200	4:1	450	250	Cat: III	14
SI 6	5,7	6	**360**	**250**	200	4:1	450	250	Cat: III	19
SI 10L	9,5	10	**360**	**250**	200	4:1	450	250	Cat: IV	31
SI 10	9,5	10	**360**	**250**	100	4:1	900	250	Cat: IV	33
SI 12	11	12	**360**	**250**	100	4:1	900	250	Cat: IV	37
SI 20	18	20	**360**	**250**	100	4:1	900	250	Cat: IV	48
SI 25	23,5	25	**360**	**250**	100	4:1	900	250	Cat: IV	53
SI 35	33,5	35	**360**	**250**	100	4:1	900	250	Cat: IV	78
SI 42	40	42	**360**	**250**	100	4:1	900	250	Cat: IV	90
SI 50	48,5	50	**360**	**250**	100	4:1	900	250	Cat: IV	110

(1) Design pressure calculated according to EN14359:2017 (for pressure values according to other norms please contact SAIP)

(2) Design pressure calculated according to ASME VIII Div.1 – Appendix 22 (for pressure values according to other norms please contact SAIP)

(3) Maximum admissible differential pressure (pressure difference between the maximum operating pressure P2 and the minimum operating pressure P1) to have an infinite life cycle (more than 2.000.000 cycles)

(4) Flowrate measured using mineral oil with viscosity of 36 cSt at 50 °C and ΔP = 5 bar

(5) For higher values please contact SAIP

SI Type bladder accumulators in carbon steel for pressures up to 360 bar

SAE 3000 and SAE 6000
Fluid Connection

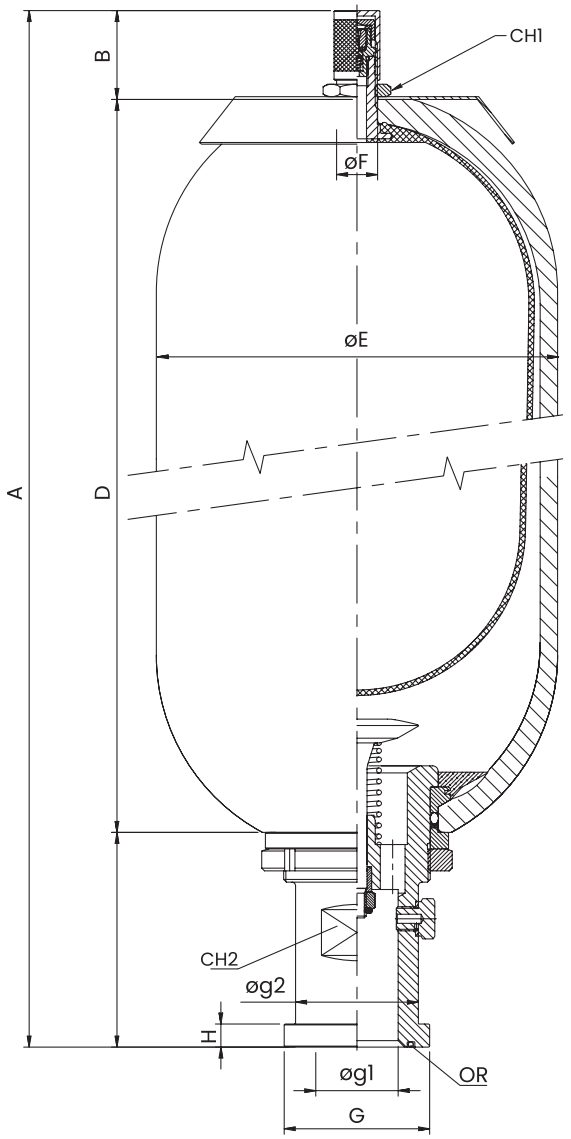

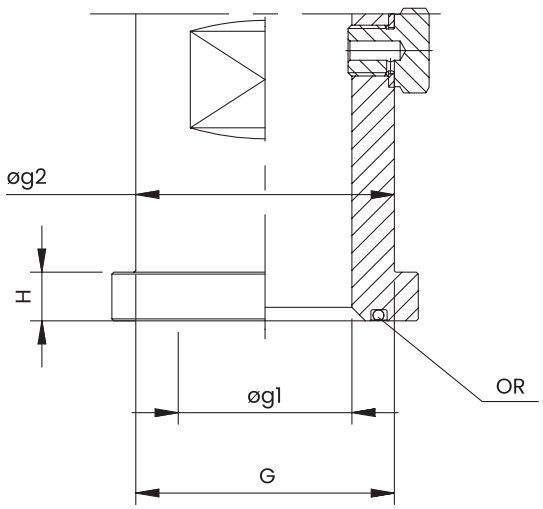

G	Øg1	Øg2	H	OR
1.1/4" SAE 3000 Ø50,8	31	43	8	OR 4150
1.1/4" SAE 6000 Ø53,3	31	44	10,3	OR 4150
1.1/2" SAE 3000 Ø60,3	32	50	8	OR 4187
1.1/2" SAE 6000 Ø63,5	32	51	12,5	OR 4187
2" SAE 3000 Ø71,5	45	62	9,5	OR 4225
2" SAE 6000 Ø77,6	45	67	12,5	OR 4225

SAE 3000 and SAE 6000
Fluid Connection

Dimensions

Type	Gas connection (nitrogen)	Fluid connection G	A	B	C	D	ØE	ØF	CH1	CH2	DRAIN
			[mm ±10]	[mm ±2]	[mm ±2]	[mm ±10]	[mm ±1]	[mm]	[mm]	[mm]	
SI 4	5/8" UNF Valve	1.1/4" SAE 3000	403	51	89	287	168	22,5	32	38	M5
		1.1/4" SAE 6000									
SI 6	5/8" UNF Valve	1.1/4" SAE 3000	532	51	89	416	168	22,5	32	38	M5
		1.1/4" SAE 6000									
SI 10L	5/8" UNF Valve	1.1/4" SAE 3000	797	51	89	681	168	22,5	32	38	M5
		1.1/4" SAE 6000									
SI 10	5/8" UNF Valve	1.1/2" SAE 3000	561	50	115	405	219	22,5	32	42	1/4" BSP-P
		1.1/2" SAE 6000									
		2" SAE 3000								55	
		2" SAE 6000									
SI 12	5/8" UNF Valve	1.1/2" SAE 3000	681	50	115	525	219	22,5	32	42	1/4" BSP-P
		1.1/2" SAE 6000									
		2" SAE 3000								55	
		2" SAE 6000									
SI 20	5/8" UNF Valve	1.1/2" SAE 3000	871	50	115	715	219	22,5	32	42	1/4" BSP-P
		1.1/2" SAE 6000									
		2" SAE 3000								55	
		2" SAE 6000									
SI 25	5/8" UNF Valve	1.1/2" SAE 3000	1036	50	115	880	219	22,5	32	42	1/4" BSP-P
		1.1/2" SAE 6000									
		2" SAE 3000								55	
		2" SAE 6000									
SI 35	5/8" UNF Valve	1.1/2" SAE 3000	1386	50	115	1230	219	22,5	32	42	1/4" BSP-P
		1.1/2" SAE 6000									
		2" SAE 3000								55	
		2" SAE 6000									
SI 42	5/8" UNF Valve	1.1/2" SAE 3000	1526	50	115	1370	219	22,5	32	42	1/4" BSP-P
		1.1/2" SAE 6000									
		2" SAE 3000								55	
		2" SAE 6000									
SI 50	5/8" UNF Valve	1.1/2" SAE 3000	1896	50	115	1740	219	22,5	32	42	1/4" BSP-P
		1.1/2" SAE 6000									
		2" SAE 3000								55	
		2" SAE 6000									

SI Type bladder accumulators in carbon steel for pressures up to 360 bar

THREADED
Fluid Connection

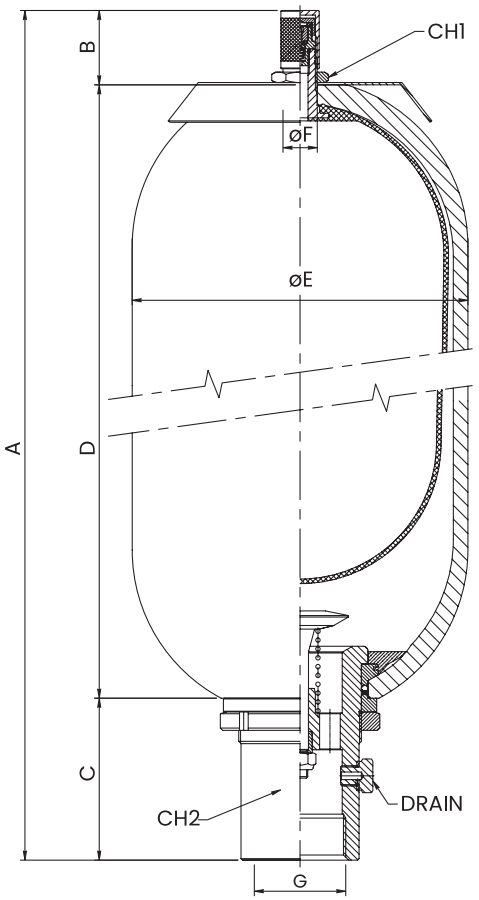

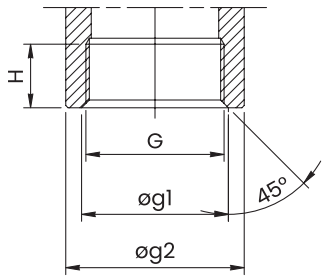

G	Øg1	Øg2	H
F. 1.1/4" BSP-P	46	53	25
F. 2" BSP-P	63,35	77	28

Dimensions

Type	Gas connection (nitrogen)	Fluid connection G	A	B	C	D	ØE	ØF	CH1	CH2	DRAIN
			[mm ±10]	[mm ±2]	[mm ±2]	[mm ±10]	[mm ±1]	[mm]	[mm]	[mm]	
SI 1	5/8" UNF Valve	F. 3/4" BSP-P	301	51	55	195	114	22,5	32	32	M5
SI 2,5	5/8" UNF Valve	F. 3/4" BSP-P	516	51	55	410	114	22,5	32	32	M5
SI 4	5/8" UNF Valve	F. 1.1/4" BSP-P	403	51	65	287	168	22,5	32	50	M5
SI 6	5/8" UNF Valve	F. 1.1/4" BSP-P	532	51	65	416	168	22,5	32	50	M5
SI 10L	5/8" UNF Valve	F. 1.1/4" BSP-P	797	51	65	681	168	22,5	32	50	M5
SI 10	5/8" UNF Valve	F. 2" BSP-P	561	50	106	405	219	22,5	32	70	1/4" BSP-P
SI 12	5/8" UNF Valve	F. 2" BSP-P	681	50	106	525	219	22,5	32	70	1/4" BSP-P
SI 20	5/8" UNF Valve	F. 2" BSP-P	871	50	106	715	219	22,5	32	70	1/4" BSP-P
SI 25	5/8" UNF Valve	F. 2" BSP-P	1036	50	106	880	219	22,5	32	70	1/4" BSP-P
SI 35	5/8" UNF Valve	F. 2" BSP-P	1386	50	106	1230	219	22,5	32	70	1/4" BSP-P
SI 42	5/8" UNF Valve	F. 2" BSP-P	1526	50	106	1370	219	22,5	32	70	1/4" BSP-P
SI 50	5/8" UNF Valve	F. 2" BSP-P	1896	50	106	1740	219	22,5	32	70	1/4" BSP-P

Sizing

For the sizing of an accumulator sizing various factors have to be considered:

- Minimum (P1) and maximum (P2) working pressures
- Minimum (T1) and maximum (T2) working temperatures
- Precharge pressure (P0)
- Required volumes

For the correct sizing, you can find the formulas in the document under the section
GENERAL INFORMATION -> SIZING

Certifications

All hydraulic accumulators are pressure vessels and are subject to the national regulations and directives in force in the country of installation.
The accumulators type SI are manufactured in accordance with the European Directive PED 2014/68/EU, reference standards EN 14359:2017 and EN13445-3:2021; they are also in accordance with ASME VIII Div. 1 - Appendix 22, with U-STAMP
The Technical Data table shows the category for use with non-hazardous fluids (group 2).

For use with hazardous fluids (group 1), please contact SAIP.
For other countries, applications, regulations, please contact SAIP.

State conditions

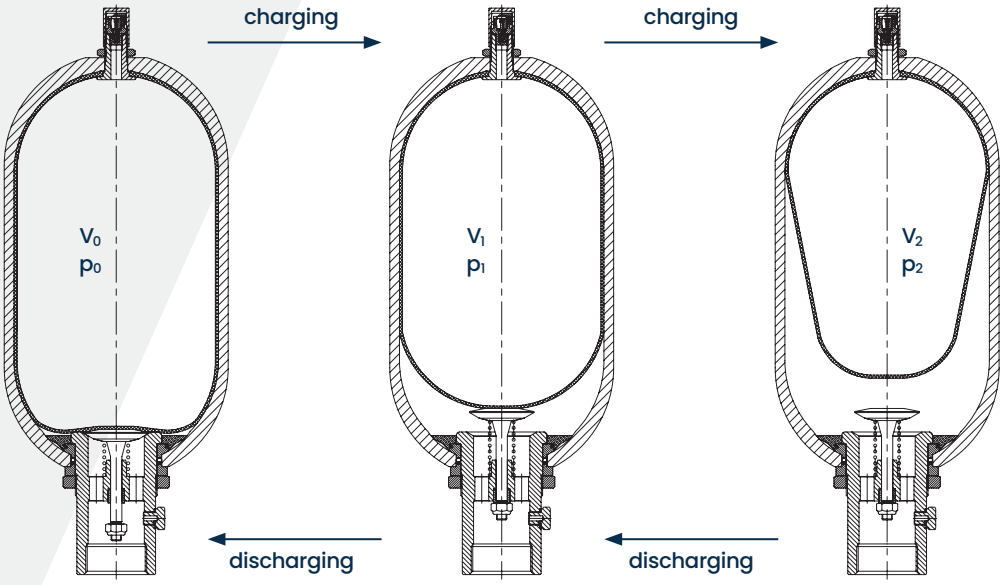

Information for Use

Refer to SAIP documents:

- OPERATING AND MAINTENANCE MANUAL MODEL SI
- MAINTENANCE, OPERATING, STORING AND CONSERVATION MANUAL FOR HYDROPNEUMATIC ACCUMULATORS / PULSATION DAMPERS

Safety equipment

Notice:
Hydropneumatic accumulators must be protected against operation outside the permissible limits according to the Pressure Equipment Directive 2014/68/EU.
In order not to exceed the maximum operating pressure, SAIP recommends the use of a safety block.
(see BSF Saip catalogue).

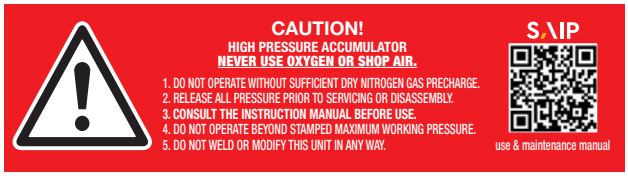

SI Type bladder accumulators in carbon steel for pressures up to 360 bar

Spare parts

Type	Complete Bladder assembly	5/8" UNF Nitrogen valve only	Complete poppet valve assembly	Rubber support ring only	O-ring	Parbak
	1	1V	2	2a	2o	2p
SI 1	MEMSI1-**xx**OZ78V-V2ORGT	VALPRE58OZ-1V2	VALFUN340-44-**xx**C5	ANEVAL340-44-**xx**	OR4150-**xx**	PAR4150-12-IO
SI 2,5	MEMSI2,5-**xx**OZ78V-V2ORGT	VALPRE58OZ-1V2	VALFUN340-44-**xx**C5	ANEVAL340-44-**xx**	OR4150-**xx**	PAR4150-12-IO
SI 4	MEMSI4-**xx**OZ78V-V2ORGT	VALPRE58OZ-1V2	VALFUN114O-61-**xx**C7	ANEVAL114O-61-**xx**	OR159-**xx**	PAR159-12-I
SI 6	MEMSI6-**xx**OZ78V-V2ORGT	VALPRE58OZ-1V2	VALFUN114O-61-**xx**C7	ANEVAL114O-61-**xx**	OR159-**xx**	PAR159-12-I
SI 10L	MEMSI10L-**xx**OZ78V-V2ORGT	VALPRE58OZ-1V2	VALFUN114O-61-**xx**C7	ANEVAL114O-61-**xx**	OR159-**xx**	PAR159-12-I
SI 10	MEMSI10-**xx**OZ78V-V2ORGT	VALPRE58OZ-1V2	VALFUN2O-**xx**C9	ANEVAL2O-89-**xx**	OR181-**xx**	PAR181-12-I
SI 12	MEMSI12-**xx**OZ78V-V2ORGT	VALPRE58OZ-1V2	VALFUN2O-**xx**C9	ANEVAL2O-89-**xx**	OR181-**xx**	PAR181-12-I
SI 20	MEMSI20-**xx**OZ78V-V2ORGT	VALPRE58OZ-1V2	VALFUN2O-**xx**C9	ANEVAL2O-89-**xx**	OR181-**xx**	PAR181-12-I
SI 25	MEMSI25-**xx**OZ78V-V2ORGT	VALPRE58OZ-1V2	VALFUN2O-**xx**C9	ANEVAL2O-89-**xx**	OR181-**xx**	PAR181-12-I
SI 35	MEMSI35-**xx**OZ78V-V2ORGT	VALPRE58OZ-1V2	VALFUN2O-**xx**C9	ANEVAL2O-89-**xx**	OR181-**xx**	PAR181-12-I
SI 42	MEMSI42-**xx**OZ78V-V2ORGT	VALPRE58OZ-1V2	VALFUN2O-**xx**C9	ANEVAL2O-89-**xx**	OR181-**xx**	PAR181-12-I
SI 50	MEMSI55-**xx**OZ78V-V2ORGT	VALPRE58OZ-1V2	VALFUN2O-**xx**C9	ANEVAL2O-89-**xx**	OR181-**xx**	PAR181-12-I

Replace xx with code of the rubber part as for table below

1	Nitrile (NBR)
1C	Low temp. nitrile (NBR -40°C)
1F	Nitrile for Hydrocarbons (NBR)
6	Hydrogenated Nitrile (H-NBR)
8	Epichlorohydrin (ECO)
2	Butyl
4	Ehylene/proylene (EPDM)
5	Chloroprene (Neoprene)
10	Fluororated rubber (FKM)

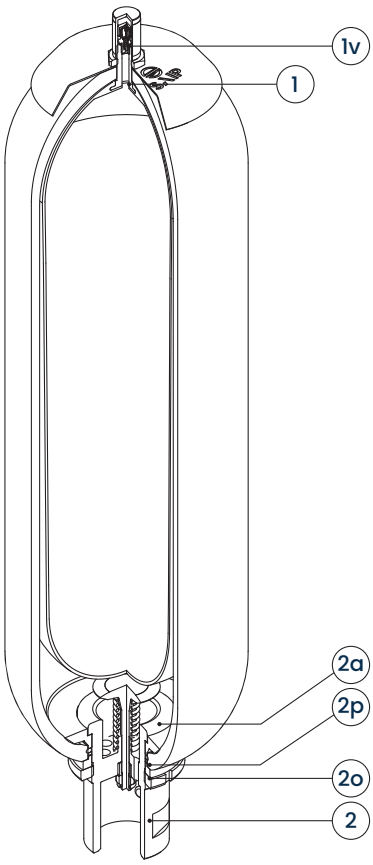

Accessories

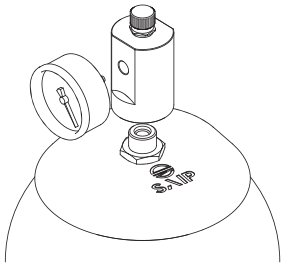

Nitrogen side pressure monitoring

Nozzle assembly with provision for mounting pressure gauge and/or fitting with rupture disk.
For codes or characteristics contact SAIP

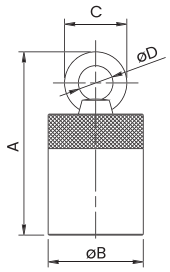

Plug with lifting lug

Plug to be mounted on upper nitrogen-side valve 7/8" UNF.
As a replacement for the standard cap.
For codes or characteristics contact SAIP

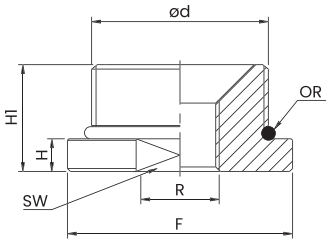

Adapters and reductions for fluid connection

Adaptors and reductions for fluid connection:
suppliable on request in different dimensions, materials etc.
For codes or characteristics please contact SAIP

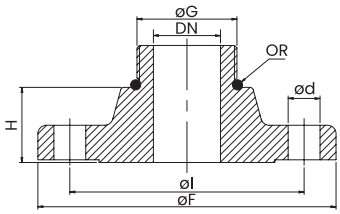

Flange for fluid connection

Flange for fluid connection: suppliable on request for norm (i.e. ASME B16.5, EN1092-1) dimensions, different material, etc.
For codes or characteristics please contact SAIP

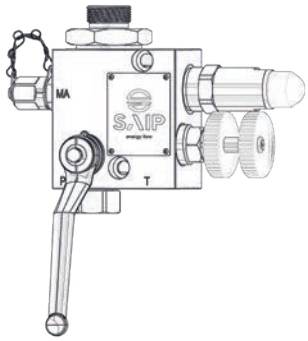

Safety block

see BSF saip catalogue

SI Type bladder accumulators in carbon steel for pressures up to 360 bar

Brackets and fixing collars

SAIP clamping brackets and collars can be used to securely fasten the various types of SI accumulators and ensure independent, non-rigid mounting on the installations.
The rubber inserts serve to reduce vibration transmission, compensate for manufacturing tolerances and relieve the connection from external stress.
The brackets and collars are made of galvanised carbon steel; a stainless steel version can be supplied on request.

The support ring of the brackets and the band of the collars are made of black NBR nitrile rubber.
Brackets and collars can be easily bolted to the system or supports.
It is recommended to use only one collar when the length of the accumulator is less than twice the diameter.

We recommend:

_ to use a bracket with support ring and one or two collars in other cases.
_ to use brackets and collars supplied by SAIP, as they are tested and guaranteed for the selected accumulator model.

Brackets with rubber ring support

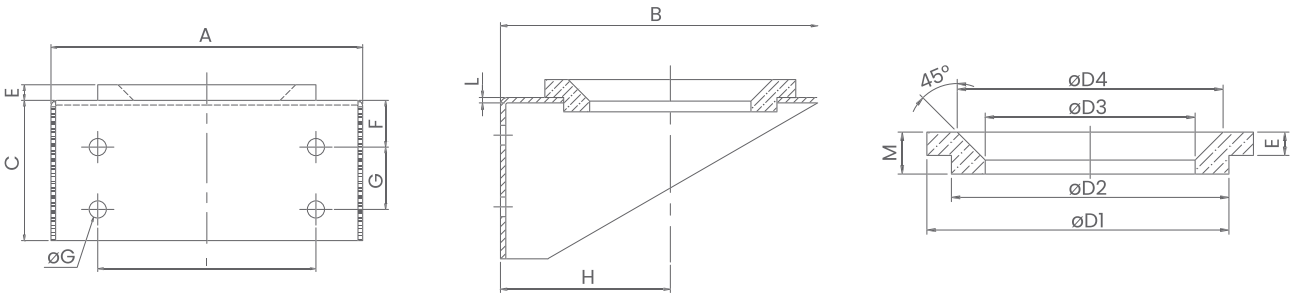

Dimensions

Part no. bracket	Part no. ring	A	B	C	D	D1	D2	D3	D4	E	F	G	H	I	L	M	Weight	Use on SI
		mm															Kg	Lt
MOZ175-1	ANE175-1	200	177	90	10	140	120	91	114	10	30	40	95	140	3	18	1,6	4 - 6 -10L
MOZ260-1	ANE260-1	260	232	120	17	200	170	150	176	15	30	70	128	200	4	22	3,8	10÷50

Mounting clamps light series

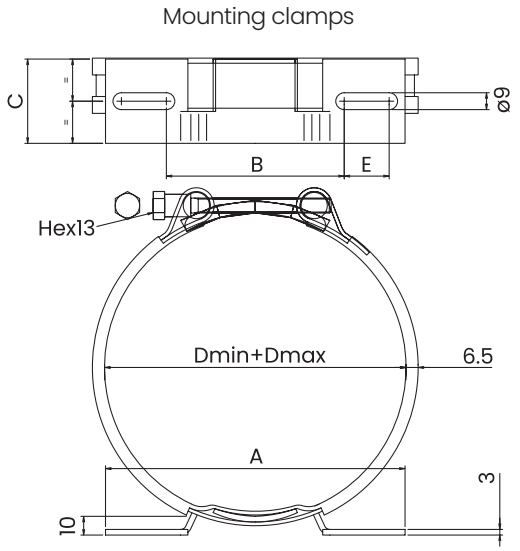

Dimensions

Type		Description							
AISI 316L	CARBON STEEL	Dmin	Dmax	A	B	C	E	Weight	Model
		[mm]		[mm ±1]		[mm ±0,5]		Kg	
CFX111LF160	CFOZ111LF160	106	114	144	93	45	17	0,4	SI 1-2,5
CFX111LF210	CFOZ111LF210	106	114	214	145	50	24	0,5	
CFX172LF160	CFOZ172LF160	168	181	144	93	45	17	0,5	SI 4-6-10L
CFX172LF160	CFOZ172LF210	168	181	214	145	50	24	0,5	

Mounting clamps heavy series

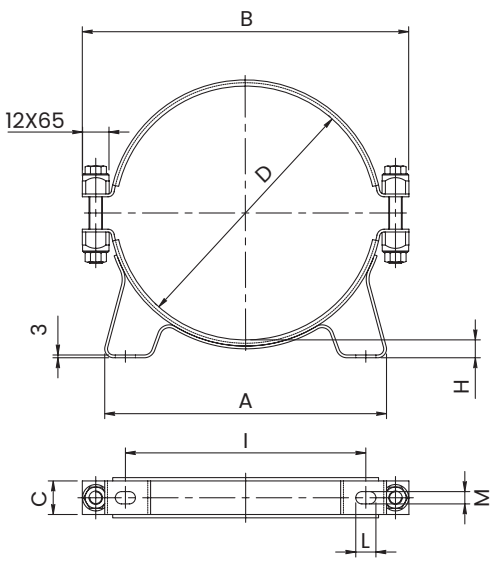

Dimensions

Rif.	A	B	C	D	H	I	L	M	Weight	Model
	mm								Kg	
CFOZ120P	131	178	30	114÷122	11	100	13	9	0,85	SI 1-2,5
CFOZ175P	182	237	30	168÷176	12	146	13	9	1,1	SI 4-6-10L
CFOZ220P	250	290	30	215÷227	16	215	18	11	1,35	SI 10÷50

SAIP

energy flow

SI - rev. October 2026

saip.it

SAIP S.r.l.
Hydropneumatic
Accumulator Company

Via Lambro 23/25/27
20073 Opera (MI) Italy
P.Iva 10218550159

DONWLOAD
DATA SHEET